UDC 621.646.1
DOI: 10.15587/1729-4061.2025.327160

DETERMINING THE INFLUENCE OF DRUM MIXER PARAMETERS ON THE CHANGE IN DOUGH COMPONENTS CONCENTRATION AT THE INITIAL MIXING STAGE

Igor Stadnyk
Corresponding author
Doctor of Technical Sciences, Professor*
E-mail: igorstadnykk@gmail.com
Volodymyr Piddubnyi
Doctor of Technical Sciences, Professor, Corresponding member of the National Academy of Agrarian Sciences, Director
State Scientific Institution "Ukrainian Scientfic Research Institute of Spirit and Biotechnology of Food Products"
Senkivskyi lane, 3, Kyiv, Ukraine, 03190
Olena Kolomiiets
PhD, Associate Professor
Department of Tourism, Recreation, Cross-Cultural Communication and Fundamental Training
Khmelnytskyi Institute of the Interregional Academy of Personnel Management
Myru ave., 101 a, Khmelnytskyi, Ukraine, 29000
Andrii Chahaida
PhD, Associate Professor
Department of Tourism and Hotel and Restaurant Business
Zhytomyr Polytechnic State University
Chudnivska str., 103, Zhytomyr, Ukraine, 10005
Oleh Kravets
PhD, Associate Professor*
Viktor Fedoriv
PhD, Associate Professor
Department of Industrial Engineering and Agroengineering
Khmelnytskyi National University
Instytutska str., 11, Khmelnytskyi, Ukraine, 29016
Olena Ieremeieva
PhD, Associate Professor
Department of Food Technologies
Uman National University of Horticulture
Institutetska str., 1, Uman, Ukraine, 20301
Vitalii Mihailik
PhD, Assistant
Department of Restaurant and Craft Technologies
State University of Trade and Economics
Kyoto str., 19, Kyiv, Ukraine, 02156
Rostyslav Kravcheniuk
PhD Student*
Iurii Radchenko
Independent Researcher, Presidente
Azienda Darmi Fabarm
Via Averolda, 31, Travagliato, Italy, 25039
*Department of Food Technologies Equipment
Ternopil Ivan Puluj National Technical University
Ruska str., 56, Ternopil, Ukraine, 46001

The object of this study is the process of mixing flour components and the liquid phase in a mixer. The research task is to analyze features of the technological process of dough mixing and establish regularities of uniform distribution of components based on theoretical and experimental studies of physical-mechanical, colloidal, and biochemical processes. Mathematical models and conceptual approaches have been proposed for modeling the transfer of flour components and liquid during dough mixing. A conceptual representation of an improved model of the first stage of dough mixing has been considered, taking into account the influence of design parameters of the drum working body and the multifaceted working chamber of the mixer and technological modes. Additionally, a modified equation was built for numerical modeling of the initial stage of mixing. This makes it possible to effectively calculate spatial variables and make preliminary predictions of the process dynamics.

It has been established that the duration of interaction among components before the formation of a liquid-viscous structure is 60–65 seconds. At this step of the stage, it is important to enable high mixing intensity to achieve rapid and uniform distribution of components to ensure the required quality of the mixture.

A feature of the results is the determination of the time and spatial parameters of the process, as well as the establishment of fundamental regularities of the pre-mixing stage. The proposed approaches could be used at the stages of design calculations to assess the efficiency of mixers and select their rational parameters, which would contribute to increasing the productivity and quality of the finished product

Keywords: machine parameters, component dosing, mixing process, mixture structure formation, first stage

Received date 04.02.2025
Received in revised form 20.03.2025
Accepted date 14.04.2025
Published date 29.04.2025

How to Cite: *Stadnyk, I., Piddubnyi, V., Kolomiiets, O., Chahaida, A., Kravets, O., Fedoriv, V., Ieremeieva, O., Mihailik, V., Kravcheniuk, R., Radchenko, I. (2025). Determining the influence of drum mixer parameters on the change in dough components concentration at the initial mixing stage. Eastern-European Journal of Enterprise Technologies, 2 (11 (134)), 6–15. https://doi.org/10.15587/1729-4061.2025.327160*

1. Introduction

The dough mixing process is a key technological operation that determines the quality and efficiency of bakery production. In the context of increasing requirements for the quality of bakery products, innovative mixing technologies and a more accurate understanding of the mechanisms of this process are becoming especially relevant. That is why

Copyright © 2025, Authors. This is an open access article under the Creative Commons CC BY license

mixing is considered an important stage for the intensification and modernization of current production.

The stages of mixing are characterized by numerous factors and complex relationships that significantly affect the quality of the dough and the final product. Depending on the production conditions and properties of the raw materials, the priority of technological parameters may change. However, most mixers do not provide sufficient sensitivity to rapid changes in the properties of the raw materials or mixing modes, which makes it difficult to maintain stable dough quality.

Given the above factors, special attention needs to be paid to the study of the initial stage of dough mixing, when the liquid-viscous structure of the mixture is formed. During this period, the design features of the mixer, the spatial-temporal dynamics of mixing, and the intensity of component interaction play a decisive role. Analysis of the influence of these parameters allows for a deeper understanding of the mechanisms of formation of a homogeneous dough structure and provides prerequisites for improving the efficiency of the technological process.

2. Literature review and problem statement

In [1], the results of modeling the process of mixing components are reported in order to determine the rational parameters of the working parts of machines. It is shown that the use of numerical modeling makes it possible to take into account the complexity of the trajectories of particle motion in the working chamber. At the same time, the work did not address the issues of the influence of the rheological properties of the medium on the efficiency of the mixing process. This is explained by the objective difficulties of modeling complex multicomponent systems with nonlinear properties. In addition, obtaining reliable model parameters requires significant experimental costs, which complicates the conduct of such studies at individual stages.

One of the possible ways to overcome these difficulties is to design equipment that enables effective interaction of components due to specially organized modes of their motion. This approach is implemented in [2], which substantiates the scientific and technical foundations of processes and equipment for paddleless kneading of dough, which contributes to the formation of the required product structure. The effectiveness of organizing the interaction of flour and liquid components in the working chamber to obtain a homogeneous mass is shown. At the same time, the issue of changing the concentration of the mixture relative to the stages of the mixing process, as well as the spatial-temporal distribution of components in the medium, taking into account its structural dynamics and rheological properties, has not been addressed in detail.

In study [3], a method for calculating the process of mixing bulk materials in an apparatus with an open working chamber was proposed. It was shown that such a design allows for a uniform distribution of components. However, the influence of the viscoplastic properties of the medium, characteristic of the dough, was not taken into account, which makes it impossible to directly apply this methodology to simulate dough mixing. This is due to the fundamental difference in the physical and mechanical characteristics of bulk materials and dough. One of the directions for solving this problem is to take into account the rheological properties of the dough when modeling the mixing process. This approach was implemented in [4], in which the modeling of the dough mixing process was carried out and rational parameters of the working bodies of dough mixers were determined. It was shown that optimization of the geometry and operating modes contributes to increasing the uniformity of the concentration of components. At the same time, issues regarding the determination of the change in concentration at the initial stages of dough structure formation due to a change in the physicochemical properties of the components remain unresolved. This is explained by the complexity of taking into account dynamic changes in the properties of the components under real conditions.

An important step towards overcoming these limitations was the justification in [5] of the technological process and design parameters of a high-speed screw mixer. It was shown that screw mechanisms are effective for mixing bulk and pasty materials. However, the use of screw mechanisms for mixing dough is limited due to the possibility of excessive mechanical influences, which can lead to a deterioration in its quality. This necessitates the search for integrated solutions for mixing dough. In view of this, in [6], integrated solutions and hardware design of the processes of mixing components in a fluidized bed are considered. It is shown that such an approach provides intensive mixing due to hydrodynamic processes in the medium. At the same time, a limitation of this technology is its effectiveness mainly for low-viscosity media. This significantly complicates the application of this approach for mixing dough, which is characterized by high viscosity and plasticity.

An alternative solution to this problem is to devise mixing modes taking into account changes in the rheological properties of the medium under the influence of external factors, in particular temperature fluctuations. In this context, works [7, 8] analyzed the effect of temperature fluctuations on the structure of components during mixing. It was shown that the staged interaction of ingredients allows reducing energy costs for technological processes. At the same time, changes in rheological properties under the influence of temperature were ignored, although this factor may be of key importance for ensuring the stability of the process under actual production conditions.

In work [9], the main stages of the wheat dough mixing process were determined by the method of relative quantities. The dependence of process efficiency on the duration and intensity of kneading was shown. However, the spatial-temporal distribution of components in the working chamber of the machine and the influence of the design features of the equipment were not taken into account, which limits the possibility of adapting this methodology to different types of mixers and technological conditions. However, study [10] considered modern technologies and energy aspects of the formation of flour semi-finished products. Approaches to modeling medium flows during dough processing are shown. However, questions regarding the relationship between mixing modes and dough structure formation processes at different stages remain unexplained, which is associated with the complexity of studying internal material transformations during mechanical impact. This creates a need to devise new approaches, in particular numerical modeling, which takes into account not only the kinematics of the medium movement but also the regularities of its structure change.

In studies [11, 12], the influence of the parameters and operating modes of the mixer-doser was analyzed by mod-

eling the homogeneity of the mixture during mixing of the components. It was shown that the choice of design and operating modes determines the quality of mixing. However, the peculiarities of the operation of equipment for mixing media with viscoplastic properties were not investigated, which is due to the objective difficulties of taking into account nonlinear rheological characteristics of the medium in calculation models. The solution to this issue may be the use of experimentally corrected models or hybrid modeling methods. At the same time, in work [13], numerical methods for solving applied problems were systematized, in particular, problems related to modeling technological processes. Methods of discretization, approximation, numerical integration, and optimization were reported. However, the specificity of process modeling, taking into account complex rheology, structural changes, and non-uniformity of flows, were not considered. Therefore, the issue of adapting general numerical approaches to a specific technological problem of dough mixing is relevant.

Also, in [14], an analysis of methods for modeling the mixing process was carried out. The advantages of using numerical methods for studying particle motion and optimizing equipment designs were shown. However, the features of modeling mixing processes with a viscoplastic structure remain insufficiently studied, which requires further research taking into account the properties of specific media. In study [15], the dynamics of the interphase interaction of components during mixing were considered. It was shown that hydrodynamic factors and the distribution of speeds in the working chamber of the machine determine the level of homogeneity of the mixture. However, the model built is focused mainly on liquid and dispersed systems, while the specific features of the formation of the dough structure as a multicomponent, viscoplastic system remained outside the scope of the study. This is due to the complexity of describing the behavior of the structural dynamics of the dough under mechanical impact, which emphasizes the need for further improvements in modeling to take into account such characteristics.

Despite a large body of research, the process of mixing components is mostly considered in a simplified form – without taking into account the staged nature of structure formation and the spatial-temporal distribution of components in the environment. Although significant progress has been made in the field of numerical modeling and mixer design, a number of unresolved issues remain – in particular, regarding the complete description of interphase interaction and structural changes during dough mixing.

To overcome these limitations, it is necessary to construct new models that would take into account all mixing parameters, including the rheological properties of the dough, spatial-temporal distributions of components, and design features of mixers. This could make it possible to design more accurate and effective mixing process control systems that would ensure stable product quality.

3. The aim and objectives of the study

The purpose of our study is to establish the patterns of influence of the design parameters of the mixer and technological modes on the course of concentration changes during the initial stage of dough mixing. This will make it possible to increase the uniformity of the distribution of components in the dough and improve the quality of the finished product.

To achieve the goal, it is necessary to solve the following tasks:

– to build a conceptual model of the initial stage of dough mixing, which takes into account the features of the movement of the component medium and the design parameters of the mixing equipment;

– to conduct numerical modeling of concentration changes of components during the mixing process based on a modified mathematical model in order to assess the influence of design and mode factors on the efficiency of distribution.

4. The study materials and methods

4. 1. The object and hypothesis of the study

The object of our study is the process of mixing flour components and the liquid phase in a mixer.

The hypothesis of the study assumes that the design parameters of the mixer and the technological mode of its operation could increase the uniformity of the distribution of components at the initial stage of dough mixing. To test this hypothesis, it is planned to build a mathematical model that will make it possible to establish the dependence between the design and technological parameters of the mixer and the qualitative indicators of concentration changes of dough components at the initial stage of mixing.

The assumptions accepted before conducting the study are as follows. The medium that is mixed at the initial stage of mixing is considered as a heterogeneous dispersed system with certain rheological properties. The distribution of components in the medium is due to the action of mechanical mixing and mass transfer processes. The influence of external factors (ambient temperature, air humidity, heat release during mixing) on the processes of component distribution is not taken into account.

The simplifications adopted in the study are as follows. The geometry of the working chamber and the working parts of the mixer are considered constant and unchanging during the mixing process. The physicochemical properties of the dough components are assumed to be constant at the initial stage of mixing. The mixed medium is considered as a set of individual components whose distribution uniformity is the efficiency of the process.

4. 2. Laboratory physical model of a discrete action mixer

The geometry of the working body is a rotating drum with notches, which affects the distribution of speeds in the mixture and areas with intensive mixing (Fig. 1).

Working chamber 1 is a polyhedron with plasticizer 4 installed, which does not participate in the first stage. Working body 2 and multifaceted working chamber 1 contribute to the rapid formation of a uniform concentration of components. The liquid phase penetrates the flour faster due to its fluidity, forming local zones of high concentration. During the first 5 seconds, flour is dosed, after which the liquid phase is added. When interacting with the surface layer of flour, a highly concentrated mixture is created, which constantly changes its state. The concentration of components changes in time and space. The basic technological and design parameters are summarized in Table 1.

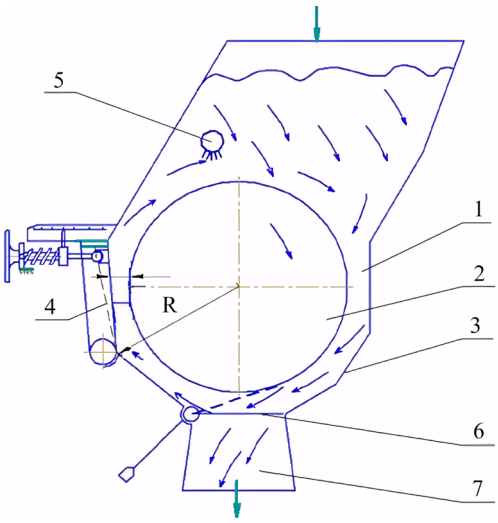

Fig. 1. Machine cutaway diagram: 1 — working chamber; 2 — grooved kneading drum; 3 — polyhedron-shaped sidewalls; 4 — regulator with consistency stabilizer; 5 — liquid component feeder; 6 — discharge gate; 7 — dough discharge pipe

Table 1

Initial parameters and calculated results

Parameters	Designation	Value	Measurement unit
Dough density	ρ	950	kg/m³
Working body design	–	grooved drum	–
Mixing chamber volume	V	0.4	m³
Component ratio	–	3.5 flour, 2.4 liquid	kg
Temperature	T	30	°C
Mixing time	t	60	s
Delay time before adding liquid	td	5	s
Working body rotation speed	ω	1.7	rps
Rotation radius	R	0.1	m
Flow rate	v	0.1–0.3	m/s
Medium viscosity	η	4×10^{-3}	Pa·s
Diffusion coefficient	D	$2–6\times10^{-4}$	m²/s

4. 3. Determining the concentration by analyzing parameters of the difference equation

For numerical solution of the transport equation, the finite difference method in the implicit approach is used, as described in [14], which makes it possible to take into account the interaction of convection and diffusion. The spatial derivative is calculated using the central difference scheme. The transport equation takes the form:

$$\frac{\partial C}{\partial t}+v\frac{\partial C}{\partial x}=0, \tag{1}$$

where C is the concentration; t is the time; x – coordinate, v is the flow velocity, and ∂x and Δt are the spatial step and in time, respectively.

With the initial condition $C(x,0)=C_0(x),\quad 0\le x\le L$ specifies the concentration distribution at the initial time. The boundary condition $C(L,t)=Ce,\quad t\ge 0.$ It is a fixed concentration on the right boundary of the region.

Equation (1) is solved by the finite difference method in a one-dimensional statement. The spatial step is determined $dx=\frac{L}{N-1}$, where L is the length of the calculation region, N is the number of discretization points in space. The time step Δt is determined taking into account the stability of the numerical method and is included in equation (3) in the form of the relation $\frac{vdt}{dx}$. The dimensionless parameter $\frac{vdt}{dx}$ determines the correctness and accuracy of the numerical modeling of the transport process. It shows what part of the spatial step the medium passes in one time step. The stability of the numerical scheme depends on its value, that is, if the parameter exceeds unity, numerical instabilities are possible.

To solve the concentration transport equation (1), an explicit upwind scheme was used. That made it possible to update the concentration values at each time step. After discretization (1), we obtained:

$$\frac{C_i^{n+1}-C_i^n}{\Delta t}+v\frac{C_i^n-C_{i-1}^n}{dx}=0, \tag{2}$$

where C_i^n – concentration on working body i at time layer n; C_i^{n+1} – concentration on working body i at the next time layer n+1; C_{i-1}^n – concentration on the adjacent surface of working body i–1 at time layer n.

By transforming this equation, we derive a formula for the difference equation of concentration update:

$$C_i^{n+1}=C_i^n-\frac{vdt}{dx}\left(C_i^n-C_{i-1}^n\right), \tag{3}$$

where C_i^n is the concentration at point x_i and time t_n and C_{i-1}^n is the concentration at the same point at the next time step t_{n+1}; v is the transfer rate.

Taking into account the initial and boundary conditions, this method makes it possible to correctly model the transfer of concentration in the medium.

5. Results of investigating the influence of technological and design parameters on the change in concentration during dough mixing

5. 1. Construction of a conceptual representation of an improved model of the first stage of mixing

The homogeneity of the mixture at the first stage of mixing is expediently assessed through the specific surface area of the phase interface, which is determined by the design parameters of the mixer. The calculation of this characteristic is performed according to the ratio:

$$S_{od}=\frac{S_{n.f}}{V}, \tag{4}$$

where the specific surface area of the phase interface, m²/m³; the total surface area of the phase interface, m²; V is the volume of the mixing system, m³.

This approach ensures a planned course of the mixing process, which creates conditions for the stable formation of the mixture structure. The process of the first stage of mixing is expediently described as an open system with input and output flows of components. In this case, a dependence is

established between the concentrations of the key component at the input and output of the mixer working zone, which can be represented in the form:

$$c(t)_{out} = A\left[C(t)_{in}\right], \quad (5)$$

where $c(t)_{in}$ – instantaneous value of the concentration of the key component in the input stream; $c(t)_{out}$ – instantaneous value of the concentration of this component in the mixed mixture; A – transformation operator, characterizing the features of the mixing process in this equipment.

In order to more accurately describe the mixing process, additional parameters can be introduced into expression (5) that take into account the influence of design and technological factors on the transformation operator:

$$c_{in}(t) = A\left[C_{out}(t), params\right], \quad (6)$$

where $c_{in}(t)$ is the instantaneous value of the concentration of the key component in the input stream; $c_{out}(t)$ is the instantaneous value of the concentration of the key component in the output mixture; A is the transformation operator that determines the relationship between the input and output concentrations taking into account the design and technological parameters of the mixing system.

The proposed refinement (6) provides the possibility of more accurate consideration of the design features of the mixer, its operating parameters, and the physicochemical properties of the components being mixed. This approach improves the adequacy of the mathematical model and allows for accurate description of the regularities of the mixing process under different technological conditions.

Taking into account the specificity of the technological process and negative factors affecting the efficiency of staged pattern in dough formation, a conceptual model of mixing was devised, shown in Fig. 2.

The main purpose of our model is an improved reflection of the process of combining mixing mechanisms while observing the established technological parameters. Its concept is based on the understanding that during the mixing process, the characteristics of the mixture are constantly changing due to the dynamic formation of phase contact zones of the components. It is at these stages that the initial structure of the dough is formed, which determines its further physicochemical and rheological properties. The key factor in the process is the interaction of flour particles with liquid components and ensuring uniform moisture distribution throughout the volume of the mixture, which is necessary to achieve the proper structure of the dough.

The proposed model (Fig. 2) describes the relationship of the main factors that determine the nature of mixing: the design parameters of the mixer, its operating modes, and the physical and mechanical properties of the "flour – liquid components" system. It reflects the processes of dough structure formation and concentration redistribution of its components in the working chamber.

The mixing process is the result of a combination of mechanical action of the working elements of the mixer and physicochemical phenomena – diffusion, homogenization, and hydrodynamics. The effectiveness of these processes depends on machine parameters, such as the shape and dimensions of the working chamber, the design of the working element, the rotation frequency, the duration of the process and the specific energy consumption. The intensity of the mechanical action on the mixture is determined by the type and shape of the working element, the characteristics of the chamber, the rotation frequency, and the duration of the process.

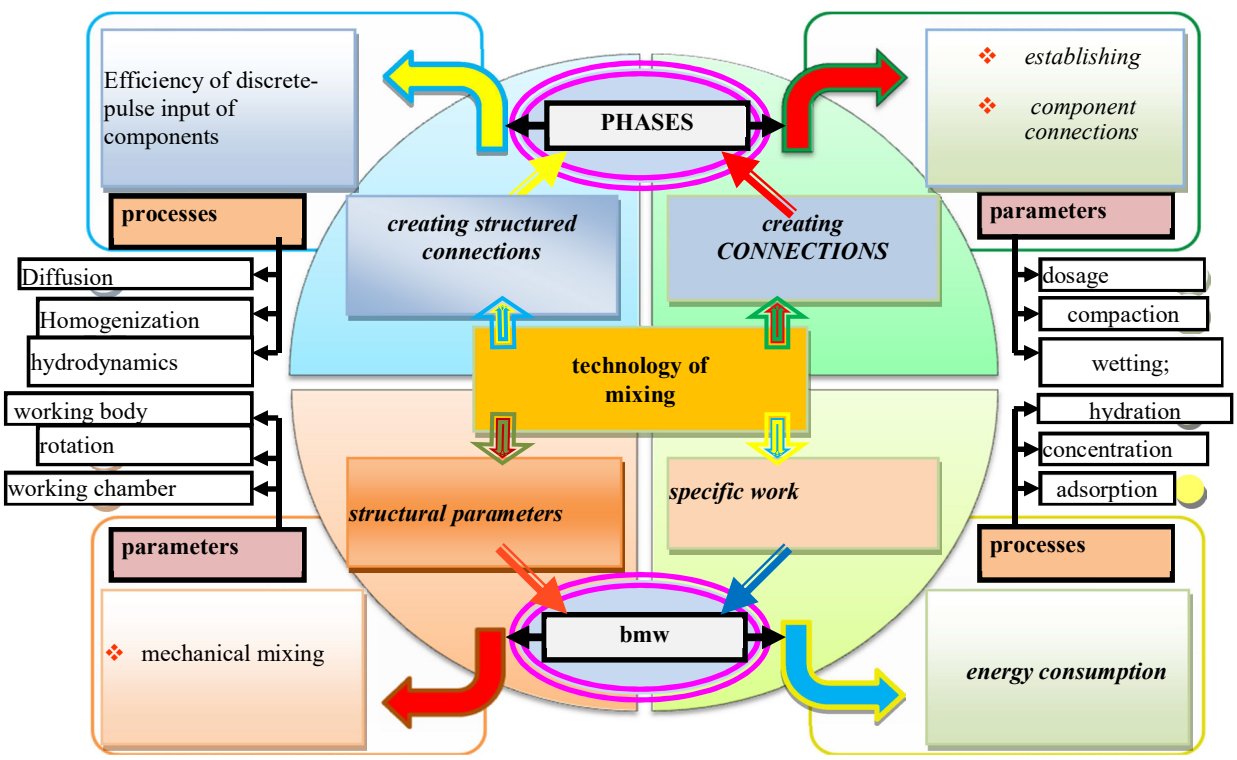

Fig. 2. Improved model of the first stage of mixing

The formation, destruction, and restoration of bonds between components occur cyclically depending on the parameters of the machine and the duration of the process. Dough formation occurs through the creation of structured bonds and the establishment of intercomponent interaction, in particular along a concentration gradient. These processes are influenced not only by the design parameters of the machine but also by technological modes, such as the ratio of liquid and solid phases, temperature, and viscosity of the medium.

The improved model of the mixing process (Fig. 2) takes into account the change in the concentration of key components in the working chamber of the mixer, the dynamic formation of phase contact zones, the cyclicity of the processes of destruction, and restoration of bonds between particles, as well as the influence of the design and technological parameters of the mixer on the efficiency of mixing.

Due to this, the model allows for a more accurate description of the course of the mixing process, systematically combining the mechanical actions of the working bodies with the physicochemical transformations of the medium. It captures the change in the concentration of components, the dynamics of the formation of contact zones and the structuring processes, which are critically important for obtaining dough with specified quality characteristics.

5. 2. Modified equation and results of modeling the concentration distribution of components in the working chamber of the mixer

One of the key stages of improving the model was the introduction of a diffusion term that describes the microscopic process of interaction of molecules of different components of the mixture. Modification of equation (6) makes it possible to take into account not only diffusion but also other important factors, such as the mechanical effect of working bodies, local concentration gradients, and viscosity of the medium. This approach improves the accuracy of modeling the concentration distribution in the working chamber of the mixer. The improved equation is represented in a generalized form, which provides the possibility of its adaptation to various process conditions, and the accuracy of the results obtained is assessed by analyzing the dependence of mixing efficiency on design and technological parameters. Taking into account diffusion processes makes it possible to describe in more detail the mechanism of formation of a homogeneous medium, which is critically important for ensuring uniform distribution of components at the initial stage of mixing.

The modified equation can be written as:

$$C_i^{n+1} = C_i^n - v\frac{\Delta t}{\Delta x}\left(C_i^n - C_{i-1}^n\right) + \\ + D\left(x,t\right)\frac{\Delta t}{\Delta x^2}\left(C_{i-1}^n - 2C_i^n + C_{i-1}^n\right) + k_m \omega \Delta t\left(f,x,t\right), \quad (7)$$

where $D(x,t)$ is the diffusion coefficient that takes into account the properties of the mixed mixture; k_m is the coefficient that takes into account the geometry of the mixer; ω is the rotation speed of the working body; $f(x,t)$ is a function that takes into account the spatiotemporal change in concentrations caused by dosing or local mixing intensity.

Model (7) describes the concentration of the liquid mixture, not individual components since the mixing parameters (rotation speed of the working body, mixing time, diffusion of components) are taken into account. This equation makes it possible to establish the concentration of the mixture at each interval of space and time in order to track its change in the working chamber. In equation (7), expression $v\frac{\Delta t}{\Delta x}\left(C_i^n - C_{i-1}^n\right)$ is the convective process of transferring components due to the movement of the mixture and $D\left(x,t\right)\frac{\Delta t}{\Delta x^2}\left(C_{i-1}^n - 2C_i^n + C_{i-1}^n\right)$ describes the mixing processes due to molecular diffusion. The value of $k_m \omega \Delta t\left(f,x,t\right)$ takes into account the mixing efficiency depending on the machine parameters and the mixing intensity.

Under real conditions, the rotation of the working body creates turbulent flows that contribute to the mixing of components. However, these flows are not uniform, and this can lead to an uneven distribution of components in the space of the mixing chamber. To take into account such effects, a parameter is added to equation (7), which depends on the design characteristics of the machine and its operating conditions:

$$C_i^{n+1} = C_i^n - v\frac{\Delta t}{\Delta x}\left(C_i^n - C_{i-1}^n\right) + \\ + D\left(x,t\right)\frac{\Delta t}{\Delta x^2}\left(C_{i-1}^n - 2C_i^n + C_{i-1}^n\right) + \alpha\left(\frac{v}{R}\right)C_i^n, \quad (8)$$

where α is a coefficient that takes into account hydrodynamic effects (for example, turbulence), and v and R are the flow velocity and the radius of rotation of the working body.

Formula (8) describes the process of changing the concentration of components under real mixing conditions. Taking into account the data (Table 1), the calculation of the Reynolds number and the estimation of the coefficient α for mixing components are performed as follows. The Reynolds number for turbulent flow was determined from the formula:

$$\mathrm{Re} = \frac{\rho v L}{\mu}, \quad (9)$$

where ρ is the density of the liquid (kg/m^3); v is the flow velocity (m/s); L is the characteristic length, m; μ is the dynamic viscosity of the liquid, which is from 0.1 to 0.3 Pa·s.

The value of the Reynolds number in both cases for the minimum and maximum velocity exceeds the turbulence threshold (Re≫4000), which means turbulent flow.

Turbulence contributes to intensive mixing of the components due to the occurrence of vortices and flow oscillations. Additional turbulence is created by the working element – a drum with notches, which not only enhance turbulent effects, but also ensure uniform mixing. Taking into account the design features of the working element and the hydrodynamic conditions of the process, the mass transfer coefficient α is taken within 0.05–0.15.

According to the design, mixing occurs along a closed trajectory of rotation of the drum with notches (Fig. 1), starting from the upper part of the chamber. Model (8) was used to determine the change in concentration during 1 second of dosing at a rotation of 1.7 m/s of the working body.

To analyze the mixing process, the working chamber is conditionally divided into six zones along the trajectory of the components:

1. Zone 0–2 (dosing): initial introduction of components and their surface mixing.

2. Zone 2–4 (right part): concentration equalization under the action of centrifugal forces.

3. Zone 4–6 (lower part): accumulation of components under the action of gravity; maximum local increase in concentration.

4. Zone 6–8 (left part): return of the mixture to the top; stabilization of concentration before a new dosing cycle.

The results are summarized in Table 2.

Table 2

Numerical example of 1 second concentration simulation

Progress stage	Initial concentration C_i^n	Concentration at the nest stage C_{i-1}^n
0	1.00	0.00 (boundary condition)
1	1.00	1.02
2	1.00	1.02
3	1.00	1.02
4	1.00	1.01
5	0.50	1.52
6	0.50	0.51
7	0.50	0.51
8	0.50	0.51
9	0.50	0.00 (boundary condition)

The greatest increase in concentration was recorded at stage 5 (zone 4–6) – up to a value of 1.52. This indicates a local accumulation of the mixture in the lower part of the chamber under the influence of gravity and turbulent flows.

Based on equation (8) and data (Tables 1, 2), a plot (Fig. 3) was constructed to reflect the influence of design and technological parameters on the uniformity of the distribution of components in the mixer chamber. The 3D plot shows the evolution of the concentration of components in the first seconds after their dosing. The peak corresponds to the feed zone, and then the concentration gradually levels off due to convection and diffusion.

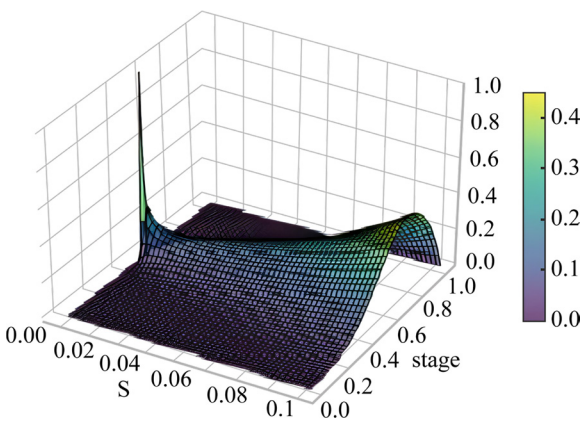

Fig. 3. Dependence plot of the concentration of components over time at a certain stage of dosing.

In this case, the calculations were performed for specific time steps, which makes it possible to trace the dynamics of the process at different stages. Since the problem was considered in a linear statement, changes in concentration were analyzed along one coordinate, and 3D visualization complements the model, clearly showing the formation of a more uniform distribution in space.

6. Discussion of results based on investigating the change in concentration during mixing of components

It was established that the dependence between the input and output concentrations of the components, taking into account the design characteristics of the mixer and its operating modes, is a determining factor affecting the intensity and efficiency of the mixing process. Based on the results related to the regularities of the mixing process under different operating modes, a conceptual model of the first stage of mixing was built (Fig. 2). This model details the specificity of the process, identifies key design and technological connections, and makes it possible to assess their impact on the consistency of the dough.

Formula (8) provides a modified mathematical description of the mixing process, which takes into account new parameters for describing the concentration of the liquid mixture, rather than individual components. The basic equation described the change in the concentration of components due to the specific surface area of the phase interface, which was determined by the design of the mixer. The modification of the equation involves taking into account dynamic factors such as flow rate, viscosity of the medium, geometry of the mixer working body, and energy dissipation, which were not previously taken into account. The improved model allows for a more accurate prediction of the mixing process, expanding the possibilities for optimizing the design characteristics of the mixer and improving the quality of the finished dough. These approaches could be used at the stages of design calculations, which would allow for a more accurate assessment of the efficiency of mixers and the selection of optimal parameters to increase productivity and product quality.

The results of our study showed that the design factors of the mixer have a significant impact on the change in concentration in the mixture, in particular on its uniformity, which is also confirmed in works [2, 15–17]. The main difference of our work from previous studies is that it takes into account the complex influence of the mixer design parameters on the dough mixing process, which allows for more accurate modeling of this process.

In [16, 17], statistical characteristics and mathematical expressions of the transformation operator are described, aimed at improving the mixing process. However, the methods used in those studies do not fully take into account the interaction of the mixer characteristics with dynamic flow factors and determine the zones of medium heterogeneity. Using the transport equation for a more accurate description of the mixing process in this work has made it possible to identify critical zones of heterogeneity and assess the efficiency of the distribution of components in the working chamber of the mixer.

The results of the conducted studies confirm that the interaction of dough components during the mixing process significantly affects the change in concentration, in particular, the degree of its uniformity, which is also confirmed in works [2, 15–17]. However, unlike the aforementioned studies, which mainly considered individual aspects of the mixing process, this work takes into account the complex influence of the mixer's design and technological parameters on the formation of a homogeneous dough structure. This make it possible toed us to significantly increase the accuracy of the process modeling and detail its course.

In addition, the fundamental difference between our results and works [15, 18] is the use of transport equations for the mathematical description of the change in the dough concentration. That makes it possible to identify critical zones of heterogeneity in the working volume of the mixer and provides the possibility of objectively assessing the efficiency of the distribution of components in the mixture.

In studies [2, 15, 19], the features of the process of water adsorption by flour were considered not only on the surface but also in the entire volume of particles, which complicates the mixing process and determines its dynamic nature. Our study (Fig. 1, 2) takes into account these aspects, which allows for more accurate modeling of the uniform distribution of moisture throughout the volume of flour. This, in turn, provides more reliable results regarding the kinetic characteristics of the mixing process, such as the speed and efficiency of the formation of the consistency of the mixture. Compared to other papers, in which these factors were taken into account only partially or under certain conditions, our study makes it possible to assess a more comprehensive impact on the mixing process and ensure better uniformity of the dough composition.

The dough mixing process requires careful control over parameters since it is the dynamics of changes in the concentration of components that determine the conditions for the formation of its structure and homogeneity, which is emphasized in works [19, 20]. At the same time, in those studies, the issue of determining the optimal mixing modes was considered mainly on the basis of empirical approaches or for individual technological cases. A feature of our study is the use of the transformation operator A in combination with the finite difference model, which made it possible to identify the optimal period of active change in the concentration of components at the initial stage of the mixing process. Analysis of the results revealed that the optimal duration of this period is 60 seconds, which provides the best conditions for forming the dough consistency and achieving its homogeneity. Thus, unlike previous studies [19, 20], a clearly defined parameter was obtained – the duration of the period of active concentration change, which creates the prerequisites for increasing the controllability of the process and optimizing the mixer operation.

According to the literature [6, 16, 21–24], the dough mixing process takes place in a complex environment where solid and liquid phases constantly interact, and its course is significantly influenced by physicochemical and microbiological factors. At the same time, in the cited studies, the main attention was paid mainly to general microbiological aspects, without integrating these processes into mathematical models of mixing. Unlike known approaches, a feature of our study is the consideration of not only microbiological processes but also dynamic factors, such as flow rate, viscosity of the medium, as well as design features of the mixer working body.

The application of such a comprehensive approach has made it possible to characterize in more detail the process of forming a homogeneous dough structure, which is reflected in the proposed model of the first stage of mixing. Our results give grounds to consider this approach a promising direction for improving the mixing process compared to known technological solutions.

Despite the fact that the influence of the design parameters of the equipment and the viscous characteristics of the medium is covered in detail in [23–26], our study additionally took into account a number of important factors that directly affect the efficiency of the dough mixing process. In particular, the inclusion of such parameters as accurate dosing of components and regulation of dynamic flow characteristics ensures compliance with the staged nature of the mixing process and contributes to the uniform distribution of components in the dough.

As the authors of [9, 22, 23] note, the ratio of components in the zones of their contact during mixing is random, and the process of their interaction should be described using statistical methods and mathematical modeling. In contrast to the above works, our study shows that the use of modeling of the spatiotemporal change in the concentration of components, taking into account real hydrodynamic conditions, allows for a more objective and complete characterization of the mixing process. This, in turn, creates prerequisites for the formation of a stable and homogeneous dough structure, which is an important condition for ensuring high quality of the final product.

The key factor in the efficiency of mixing is the use of high-precision component dosing systems, which ensures the correct ratio of ingredients and temperature control through heat release control. In studies [10, 24, 27], these aspects were considered in isolation. In contrast, our work proposes a comprehensive approach that combines design and technological solutions. In particular, a new mixer structure has been designed, which includes:

1) a multifaceted working chamber;

2) a drum-shaped working body with notches that form a directional movement of the dough;

3) a passive plasticizer to optimize the dough structure.

The proposed structural solution makes it possible:

1) to regulate the time the components stay in the intensive mixing zone;

2) to stabilize the temperature regime by controlling the dissipation of mechanical energy;

3) to ensure a targeted change in the concentration of components and achieve high dough homogeneity.

Thus, the results of our study create prerequisites for improving the technological process of kneading and forming the dough structure, taking into account the stage-by-stage principle.

Therefore, our findings confirm that effective determination of optimal mixing modes, accurate dosage of components, and control of temperature and concentration changes are critically important for ensuring high quality and stability of dough structure formation.

This study has analyzed key aspects of the process of flour-liquid interaction at the initial stages of mixing. The influence of the design parameters of the mixer and operating conditions on the uniformity of component distribution and stability of the formation of a homogeneous mixture was established. However, for raw materials with other physicochemical properties or specific rheological characteristics, the mixing process requires additional adaptations and consideration of the features of their interaction under the conditions of real technological environment.

7. Conclusions

1. We have improved conceptual representation of the model of the first stage of dough mixing, which takes into account the design parameters of the mixer (shapes of working elements, rotation speed, etc.) and technological modes (temperature, humidity, mixing time). This allows for a more accurate representation of the mixing process and its improved efficiency. As a result, a drum mixer with improved design characteristics has been proposed, which creates conditions for the effective progress of the process and ensures a stable consistency of the mixture.

2. A new equation for the mathematical model of the mixing process has been proposed, which describes the patterns of concentration changes of dough components in the working environment of the mixer. This approach allows for more accurate tracking of changes in the concentration of components at different stages of mixing, especially at the early stages of the process. A distinctive feature of this approach is the improved accuracy of step-by-step determination of spatial-temporal changes in the concentration in the working chamber of the mixer under actual conditions. This makes it possible to effectively determine the mixing duration to achieve optimal dough uniformity, especially in the early stages of the process.

Conflicts of interest

The authors declare that they have no conflicts of interest in relation to the current study, including financial, personal, authorship, or any other, that could affect the study, as well as the results reported in this paper.

Funding

The study was conducted without financial support.

Data availability

All data are available, either in numerical or graphical form, in the main text of the manuscript.

Use of artificial intelligence

The authors confirm that they did not use artificial intelligence technologies when creating the current work.

References

1. Stadnyk, I., Vitenko, T., Droździel, P., Derkach, A. (2016). Simulation of components mixing in order to determine working bodies rational parameters. Advances in Science and Technology Research Journal, 10 (31), 130–138. https://doi.org/10.12913/22998624/64068
2. Stadnyk, I. Ya. (2013). Naukovo-tekhnichni osnovy protsesiv ta rozrobka obladnannia dlia bezlopatevoho zmishuvannia tista. Kyiv, 40. Available at: https://dspace.nuft.edu.ua/server/api/core/bitstreams/e94e209e-680e-4929-a314-3ccb15ec7f5f/content
3. Volkov, M. V. (2014). Metod rascheta processa smeshivaniya sypuchih materialov v novom apparate s otkrytoy rabochey kameroy. Yaroslavl'.
4. Shpak, V. (2015). Modeliuvannia zamisu tista ta vyznachennia ratsionalnykh parametriv robochykh orhaniv tistomisylnykh mashyn. Kyiv: NUKhT, 22.
5. Gvozdev, V. O. (2008). Substantiation of technological process and design parameters of high-speed screw feed mixer. Glevakha, 193.
6. Piddubnyi, V. A., Pankiv, Yu. V., Stadnyk, I. Ya., Petrychenko, Ye. A. (2021). Integrated solutions and instrument design of transitional processes of component mixing in pseudospace. Food Production Equipment and Technologies, 42 (1), 82–90. Available at: https://oblad.donnuet.edu.ua/index.php/tehnolog/article/view/144
7. Drahuzia, O., Zubriy, O. (2018). Selection of the mixer type for the production of liquid detergents. International scientific journal "Internauka", 19 (1), 24–27. Available at: https://www.inter-nauka.com/uploads/public/15423566603541.pdf
8. Stadnyk, I., Piddubnyi, V., Chahaida, A., Fedoriv, V., Hushtan, T., Kraievska, S. et al. (2023). Energy Saving Thermal Systems on the Mobile Platform of the Mini-Bakery. Strojnícky Časopis - Journal of Mechanical Engineering, 73 (1), 169–186. https://doi.org/10.2478/scjme-2023-0014
9. Dolomakin, Y. (2016.) Determination of the main stages of mixing wheat sourdough relative method. Journal of food and packaging science, Technique and Technologies, 9, 49–54. Available at: https://dspace.nuft.edu.ua/server/api/core/bitstreams/9cb5730f-8112-4ac2-b903-d4c75388f4dd/content
10. Stadnyk, I., Piddubnyi, V., Khareba, L., Fedoriv, V., Pidhornyi, V. (2021). Suchasni tekhnolohiyi ta enerhetychni potoky pry formuvanni boroshnianykh napivfabrykativ. Ternopil, 372. Available at: https://elartu.tntu.edu.ua/handle/lib/35163
11. Derkach, A., Kravcheniuk, R., Stadnyk, I., Radchenko, Y., Piddubnyi, V. (2024). Influence of mixer parameters on the homogeneity of the resulting mixture when mixing components in the bakery industry. Technical Engineering, 1 (93), 52–57. https://doi.org/10.26642/ten-2024-1(93)-52-57
12. Vodyanitsky, G., Slyusarenko, I., Tymkiv, V. (2018). Justification of the parameters and modes of operation of the feeder mixer shredder method of modeling. Scientific Horizons, 7 3(12), 57–66. https://doi.org/10.33249/2663-2144-2018-73-12-57-66
13. Volontyr, L. O., Zelinska, O. V., Potapova, N. A., Chikov, I. A. (2020). Chyselni metody. Vinnytsia: VNAU, 322. Available at: http://repository.vsau.org/card.php?lang=uk&id=27703
14. Dereza, O., Dereza, S. (2014). Analysis of methods of design of process of mixing of forage. Naukovyi visnyk Tavriyskoho derzhavnoho ahrotekhnolohichnoho universytetu, 1 (4), 95–100. Available at: http://elar.tsatu.edu.ua/handle/123456789/1787
15. Stadnyk, I., Pankiv, Y., Vasyliv, V., Kos, T. (2020). Dynamics of inter-phase interaction of components during mixing. Food Resources, 8 (15), 174–184. https://doi.org/10.31073/foodresources2020-15-19
16. Drobot, V. I. (2019). Dovidnyk z tekhnolohiyi khlibopekarskoho vyrobnytstva. Kyiv, 580.
17. Stadnyk, P. D., Dobrotvor, I. G., Szwedziak, K. (2016). Determination of Power Output and Impact on the Rheological Parameters of Raw Materials during Rolling. Agricultural Engineering, 20 (2), 5–12. https://doi.org/10.1515/agriceng-2016-0035
18. Stefan, E. V., Miznik, L. M. (2005). Mathematical modeling of coextrusion processes in the manufacture of tubular products with fillings. Science NUHT News, 6 (44), 82–85.

19. Stadnyk, I., Piddubnyi, V., Mykhailyshyn, R., Petrychenko, I., Fedoriv, V., Kaspruk, V. (2022). The Influence of Rheology and Design of Modeling Rolls On the Flow and Specific Gravity During Dough Rolling and Injection. Journal of Advanced Manufacturing Systems, 22 (02), 403–421. https://doi.org/10.1142/s0219686723500208
20. Liaposhchenko, O. O., Ivanov, V. O., Pavlenko, I. V., Demianenko, M. M., Starynskyi, O. Ye., Kovtun, V. V. (2018). Optimizing phase separation equipment packaging with using of modular separation devices. Scientific Works. https://doi.org/10.15673/swonaft.v82i1.1018
21. Dolomakin, Yu. Yu., Babanov, I. V., Zhitnetskyi, I. G. (2016). The duration of the main stages of preparation of liquid foam, determined by the indirect method. Collection of scientific works of KhDUHT, 1 (23), 201–211.
22. Pavlenko, I. V., Yukhymenko, M. P., Lytvynenko, A. V., Bocko, J. (2019). Solving the Nonstationary Problem of the Disperse Phase Concentration during the Pneumoclassification Process of Mechanical Mixtures. Journal of Engineering Sciences, 6 (1), f1–f5. https://doi.org/10.21272/jes.2019.6(1).f1
23. Lebovka, N., Petryk, M., Vorobiev, E. (2022). Monte Carlo simulation of dead-end diafiltration of bidispersed particle suspensions. Physical Review E, 106 (6). https://doi.org/10.1103/physreve.106.064610
24. Suvolapov, V., Novitskiy, A., Khmelevski, V., Bustruy, O. (2020). Investigation of the Heat Transfer Process in Internal Combustion Engine Cylinders. Central Ukrainian Scientific Bulletin. Technical Sciences, 3 (34), 266–274. https://doi.org/10.32515/2664-262x.2020.3(34).266-274
25. Michalak, M., Ochowiak, M., Pavlenko, I., Włodarczak, S., Krupińska, A. (2019). Bubble-vortex spraying of liquid with static mixing. Poznań, 87–98.
26. Lebovka, N., Cieśla, M., Petryk, M., Vygornitskii, N. (2024). Cooperative sequential adsorption of monomers on a square lattice in the presence of repulsive interactions between near neighbors. Physical Review E, 110 (6). https://doi.org/10.1103/physreve.110.064801
27. Derkach, A., Stadnyk, I., Piddubnyi, V., Chahaida, A., Radchenko, I. (2024). Achievements and problems in studying the mechanism of thermal potential transfer regulation between liquids. Machinery & Energetics, 15 (1), 104–117. https://doi.org/10.31548/machinery/1.2024.104