International periodic scientific journal
ONLINE
www.sworldjournal.com
D.A.Tsenov Academy of Economics - Svishtov (Bulgaria)

Indexed in
INDEXCOPERNICUS
(ICV: 73)
GOOGLESCHOLAR

SWorld Journal

Issue №35
Part 1
January 2026

Published by:
SWorld & D.A. Tsenov Academy of Economics, Svishtov,Bulgaria

ISSN 2663-5712
DOI: 10.30888/2663-5712

Editor: Shibaev Alexander Grigoryevich, *Doctor of Technical Sciences, Professor, Academician*
Scientific Secretary: Kupriienko Sergiy, *PhD in Technical Sciences*

Editorial board: More than 400 doctors of science. Full list on page:
https://www.sworldjournal.com/index.php/swj/about/editorialTeam

Expert-Peer Review Board of the journal: Full list on page:
https://www.sworldjournal.com/index.php/swj/expertteam

The International Scientific Periodical Journal "SWorldJournal" has gained considerable recognition among domestic and foreign researchers and scholars. Today, the journal publishes authors from from different countries.

Journal Established in 2018. Periodicity of publication: 6 times a year

The journal activity is driven by the following objectives:

- Broadcasting young researchers and scholars outcomes to wide scientific audience
- Fostering knowledge exchange in scientific community
- Promotion of the unification in scientific approach
- Creation of basis for innovation and new scientific approaches as well as discoveries in unknown domains

The journal purposefully acquaints the reader with the original research of authors in various fields of science, the best examples of scientific journalism.

Publications of the journal are intended for a wide readership - all those who love science. The materials published in the journal reflect current problems and affect the interests of the entire public.

Each article in the journal includes general information in English.

The journal is registered in the INDEXCOPERNICUS, GoogleScholar.

DOI: 10.30888/2663-5712.2026-35-01

Published by:
SWorld &
D.A. Tsenov Academy of Economics
Svishtov, Bulgaria
e-mail: editor@sworldjournal.com

Copyright
© Authors, scientific texts 2026

https://www.sworldjournal.com/index.php/swj/article/view/swj35-01-056
DOI: 10.30888/2663-5712.2026-35-01-056

UDC: 664.6:621.86

JUSTIFICATION AND DESIGN OF OPERATING PARAMETERS OF VIBRATING DOSERS FOR FLOUR PACKAGING

ОБҐРУНТУВАННЯ ТА ПРОЄКТУВАННЯ ЕКСПЛУАТАЦІЙНИХ ПАРАМЕТРІВ ВІБРАЦІЙНИХ ДОЗАТОРІВ ДЛЯ ПАКУВАННЯ БОРОШНА

Pidlisnyj V.V. / Підлісний В.В.
c.t.s., as. prof. / к.т.н.,доц.
ORCID: 0000-0002-4718-7787
Semenov A.M / Семенов О.М.
c.t.s., as. prof. / к.т.н.,доц.
ORCID: 0000-0002-9990-2658
Higher Educational Institution «Podillia State University»,
12, Shevchenko Str., Kamianets-Podilskyi, 32316
Заклад вищої освіти «Подільський державний університет»
вул. Шевченка, 12, м. Кам'янець-Подільський, 32316
Fedoriv V.M. / Федорів В.М.
c.t.s., as. prof. / к.т.н.,доц.
ORCID: 0000-0002-4499-0910
Khmelnytskyi National University,
11 Instytutska St., Khmelnytskyi, 29016
Хмельницький національний університет,
вул. Інститутська, 11, м. Хмельницький, 29016
Mazorchuk I. I. / Мазорчук І. І.
student
Higher Educational Institution «Podillia State University»,
12, Shevchenko Str., Kamianets-Podilskyi, 32316
Заклад вищої освіти «Подільський державний університет»
вул. Шевченка, 12, м. Кам'янець-Подільський, 32316

Abstract. *The article presents a comprehensive study on the design and optimization of the operational performance of vibratory volumetric feeders integrated into high-performance wheat flour packaging lines. Based on a systematic analysis of the external environment and specific rheological properties of raw materials, the necessity of using vibration technologies to overcome the effects of arching and high adhesion is justified.*

For the first time, a mathematical model of the dynamics of interaction between the working body and a finely dispersed aerated medium is proposed, based on the change in the effective viscosity coefficient under the influence of the vibration intensity parameter. The advantages of using elliptical vibration trajectories over linear ones have been analyzed, which has made it possible to increase the stability of vibration transport and reduce the dosing error to 1,2–1,5%.

The research methodology is based on the use of Box-Benken full factorial design and vibro-rheology methods. Particular attention is paid to the design of elastic dispenser suspensions and the calculation of their cyclic endurance. The effectiveness of the implementation of a product vibration compaction unit in the package has been proven, which reduces the portion volume by 20% and improves the sealing of the container. Operational reliability indicators were calculated according to Weibull's law, which confirmed an increase in the technical readiness coefficient to 0,975. The recommendations formulated are of practical importance for increasing the productivity of packaging complexes and reducing production defects.

Key words: *design, vibratory feeder, flour packaging, elliptical vibrations, effective viscosity, dosing accuracy, equipment reliability, vibration compaction, operating parameters.*

Introduction.

The current stage of development of the food industry requires the introduction of high-speed automated packaging lines. Wheat flour is a complex, finely dispersed medium with high adhesion and a tendency to form clumps. Traditional gravity systems do not provide the necessary accuracy, which leads to line stoppages. The design of vibrating systems allows the flour to be converted into a state of pseudo-fluidization, ensuring stable dosing.

The use of traditional screw or gravity feeders in high-capacity lines often leads to product particle damage, raw material sticking to the actuators, and, as a result, line stoppages for sanitary cleaning. The external environment of real production, accompanied by dust and dynamic loads, requires the design of equipment with a high level of operational reliability and adaptability.

Many domestic and foreign scientists have studied the mechanics of bulk media and the calculation of vibration systems. In particular, the influence of vibration on changes in the rheological characteristics of food masses has been thoroughly examined in various works. However, the issue of synchronizing the dynamic parameters of vibration discharge with the subsequent process of vibration compaction of the product in consumer packaging remains insufficiently covered, especially in the context of increasing the technical readiness coefficient of equipment.

The aim of the work is to theoretically substantiate and experimentally confirm the optimal operating parameters of vibrating flour dispensers. This involves developing a mathematical model of the interaction of the working body with the material, determining rational vibration intensity modes to ensure packaging accuracy, and calculating the reliability of elastic suspension components to increase the maintenance interval of packaging complexes [1].

The object of the study is the process of vibratory dosing and packaging of wheat flour in paper containers. The subject of the study is the patterns of influence of amplitude-frequency characteristics and vibration trajectories on the productivity, dosing accuracy, and operational reliability of the equipment.

Research methodology.

The research methodology is based on experimental determination of the influence of the kinematic parameters of the vibrating feeder (amplitude *a* and frequency *n*) and geometric factors (material layer height *h*) on the effective viscosity coefficient μ of finely dispersed bulk material [2].

To carry out the research, a laboratory model of a vibrating volumetric feeder was constructed, the schematic diagram of which is shown in Figure 1.

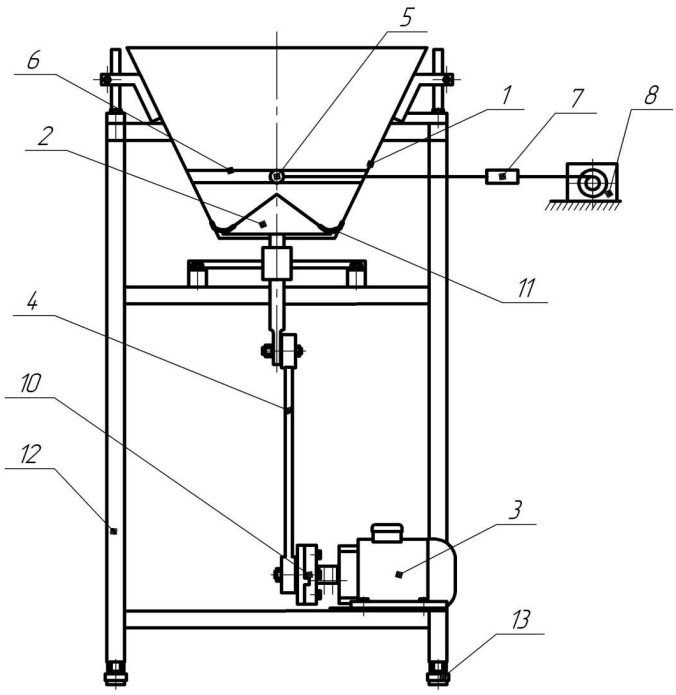

Figure 1 – Diagram of a vibrating volumetric feeder for determining the effective viscosity coefficient of finely dispersed bulk materials

The main components of the experimental model of a volumetric dispenser are the discharge chute 1, the oscillating conical bottom 2, the vibration drive 3, and the crank-connecting rod mechanism 4. To conduct the experiment to determine the effective viscosity coefficient of finely dispersed loose material, two strings 6 were stretched and fixed parallel to each other in the middle of the discharge chute of the dispenser 1, serving as guides for the ball 5. The effective viscosity of the product was determined by pulling ball 5 inside the discharge chute 1 through the loose medium. The guides 6 were installed above the top of the inner cone 2.

Using mechanism 8, ball 5 was pulled evenly through the discharge hole of

dispenser 1, and the resistance of the loose medium was measured by sensor 7. The amplitude of the oscillations of the conical bottom 2 was adjusted by spreading half-couplings 10. The ring-shaped outlet of the discharge hole of the dispenser 1 was covered with a vacuum rubber 11. The entire experimental sample was mounted on a frame 12, which was installed on adjustable legs 13.

Experimental studies of the effective viscosity coefficient of finely dispersed BM were conducted at different values of amplitude a, oscillation frequency v of the working body of the dispenser, and height h of the loaded product layer, which were determined as input factors for this experiment. When reading the sensor 7, the value of the force applied to the ball to pull it through the BM at an average speed of *0,2 m/s* was recorded. A ball with a diameter of 10^{-2} *m* was used for the experiment.

The effective viscosity coefficient was determined using the formula:

$$\mu = \frac{F_{o.c}}{3\pi \cdot d_k \cdot V_k} \quad (1)$$

where $F_{o.c}$ is the force applied to the ball to overcome the resistance of the medium when pulling it through; d_k is the diameter of the ball; V_k is the speed of the ball [3-5].

Research results.

After analyzing the obtained regression equations for determining the effective viscosity coefficient of wheat flour and the corresponding graphical dependencies, we can conclude that:

1. When the amplitude a and frequency v of the working body of the dispenser decrease, the effective viscosity of the BM increases. However, as these indicators increase, the viscosity of the product decreases and at a certain point, the BM enters a state of vibrational boiling.

2. With an increase in the height of the layer h of finely dispersed BM, its effective viscosity coefficient μ increases significantly due to the significant compaction of the product in the discharge opening area, caused by an increase in pressure in the upper layers of the material.

3. With an increase in the bulk density of finely dispersed BM, the influence of the product layer height on its effective viscosity coefficient increases due to an increase in the weight of the material layer above [6-9].

As already mentioned, studying the effect of the vibration modes *a*, *v* of the working body of the dispenser and the height of the layer *h* of the finely dispersed product on its effective viscosity coefficient μ is an important step in regulating the state of the BM and, thus, ensuring the effective operation of the volumetric dispenser.

The flow rate of wheat flour was studied using the following method. A certain amount of flour was loaded into the conical receiving hopper 1. After pressing the «start» button, the electric motor 3 was turned on, which transmitted the rotational movement to the working mechanism through the coupling 7. Due to the oscillations of the conical bottom 2, the flour flowed through the slit gap formed between the conical bottom 2 and the wall of the unloading part of the dispenser 1 [10-14].

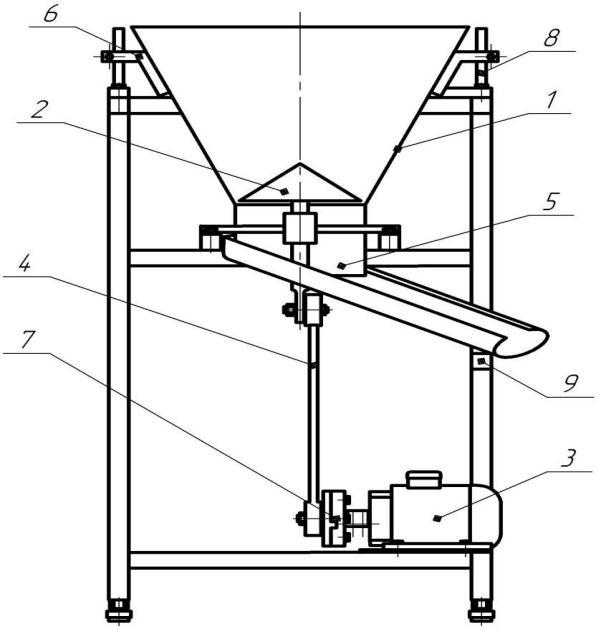

Figure 2 – Diagram of a vibrating volumetric dispenser for determining productivity

After the wheat flour exited through the outlet of the discharge chute 1, it entered pipe 5, which was secured to frame 9 with a bracket, and then flowed into the receiving container. The productivity of the dispenser was determined based on the measurement of the time it took for a fixed mass of flour to flow out. During the experiment, the duration of passage of a portion of wheat flour with a mass of *mf* = 3 kg was recorded.

The tests were carried out for several outlet sizes: *a)* b_O = 0,008 m (Fig. 3.4 *a*), *b)* b_O = 0/006 m (Fig. 3.4 *b*), *c)* b_O = 0,004 m (Fig. 3.4 *c*).

Analysis of the obtained graphical dependencies (Fig. 3. *a), b), c*) shows that an increase in the frequency *v* and amplitude *a* of the conical bottom vibrations leads to an increase in the productivity of the dispenser *Q*. At the same time, it has been established that an increase in productivity by more than 50% is also associated with an increase in the size of the annular outlet from b_o = 0,004 m to b_o = 0,008 m, since a larger cross-sectional area allows more product to pass through in the same time interval [15-18].

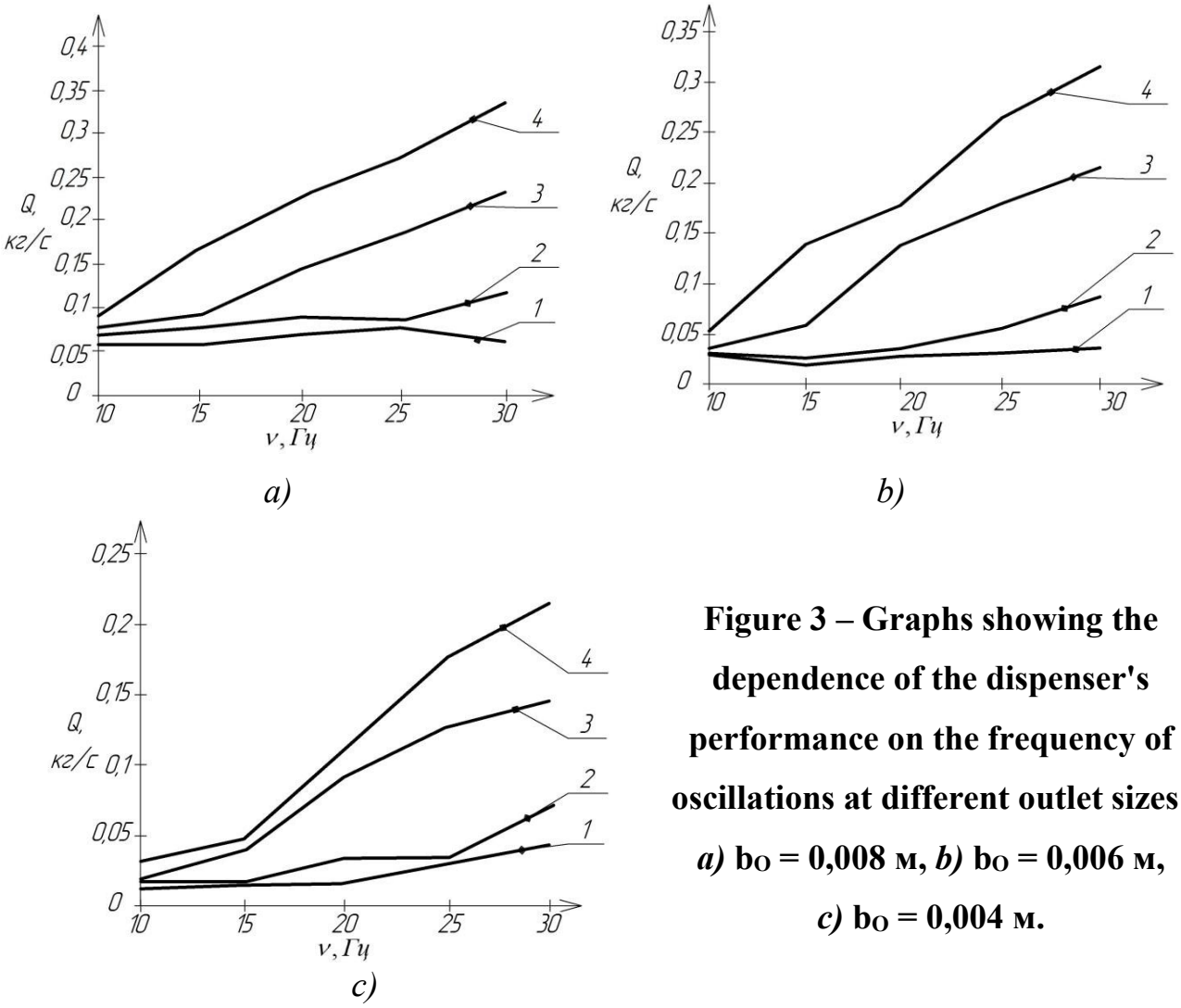

Figure 3 – Graphs showing the dependence of the dispenser's performance on the frequency of oscillations at different outlet sizes: *a)* bO = 0,008 м, *b)* bO = 0,006 м, *c)* bO = 0,004 м.

Based on the results of the research, a basic design for a vibrating volumetric feeder for finely dispersed bulk materials has been proposed, which ensures uniform feeding of materials prone to caking and lumping (Fig. 4).

To simplify operation, the dispenser design features automatic feeding of material from the hopper to the dispensing bowl using a material level regulator. Changing the

position of the contacts of this regulator controls the operation of the vibration exciter, which transports the bulk material from the loading hopper. The design parameters and operating modes of the vibration exciter are determined based on a theoretical model of the feeding process [16-19].

Transporting bulk products with good flow properties usually does not cause any difficulties. However, for fine-grained bulk materials, the efficiency of the process may be reduced due to the low speed of product movement and, accordingly, a decrease in dosing productivity. To increase the efficiency of feeding such materials, it is necessary to optimize the vibration modes of the dosing unit's working surface.

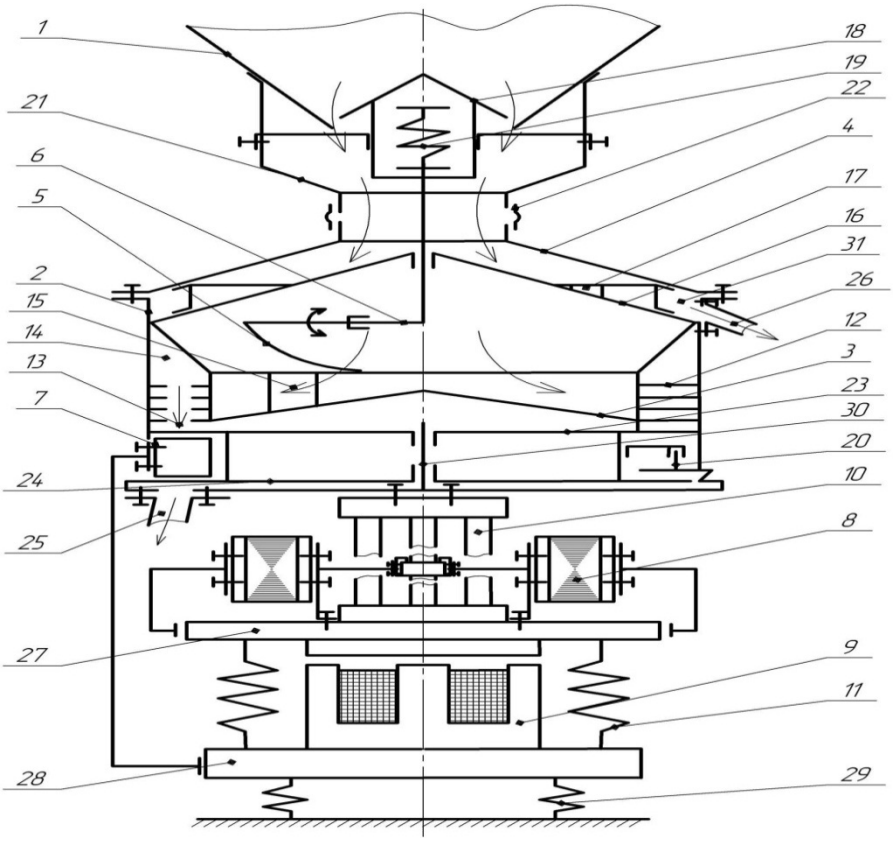

Figure 4 – Diagram of a vibrating volumetric feeder for finely divided bulk materials

This optimization is based on establishing the dependence of the bulk product transport speed on the main parameters of the oscillatory motion: the shape of the oscillation trajectory, frequency ν, amplitude a, phase shift angle between the amplitude components ε, vibration angle γ, and working surface inclination angle β. In addition, the influence of the physical and mechanical properties of finely dispersed

material, layer thickness δ, and operating conditions on the above-mentioned parameters of the vibration transport process is important.

To select the optimal modes of vibratory transportation of finely dispersed bulk materials, two types of working surface vibrations were studied: directional (linear) and elliptical, since they are most often implemented in the designs of vibratory feeders [20-24].

First, the process of vibratory transportation of material under the action of directed vibrations of the working body was considered. It is assumed that the working element of the vibratory conveyor performs harmonic rectilinear vibrations directed at an angle γ to its longitudinal axis, with amplitude a and frequency v, which are described by the equation:

$$\eta = \alpha \cdot \sin(\omega t) \tag{2}$$

where ω is the circular frequency of vibrations of the working body of the feeder.

The oscillatory movements performed by the vibrating surface can be divided into two components: transverse and longitudinal. In the flour transportation process, various functions of its movement are provided: speed is ensured by the longitudinal component, and the transportation mode is normal. The process of transporting material is determined by the combined influence of inertial forces and friction forces on it [25-29].

The main characteristics of the process of vibratory transport of finely dispersed bulk material are the velocity coefficient *(Ks)* and the parameter of the vibratory transport mode *(ξ)*. The velocity coefficient *(Ks)* is determined according to the following ratio:

$$K_s = \frac{V_r}{V_{v.t}} \tag{3}$$

where Vr is the experimentally determined velocity;

$V_{v.t}$ is the theoretical vibration transport velocity;

$$V_{v.t} = 2\pi \cdot v \cdot \alpha_h \tag{4}$$

a_h – horizontal component of the oscillation amplitude.

Overload is determined by the expression:

$$\xi = \frac{\alpha_n \cdot \omega^2}{g} = \frac{\alpha_n (2\pi v)}{g} \quad (5)$$

where an is the normal component of the oscillation amplitude.

The dependence of the vibration transport speed of wheat flour (moisture content 10%) on the thickness of the transported flour layer was determined experimentally. The study was conducted for layers of different thicknesses:

Thickness of the flour layer, *δ, m*								
0,002	0,005	0,007	0,01	0,015	0,02	0,03	0,04	0,05

The study resulted in graphical dependencies of the velocity coefficient *Ks* on the overload parameter *(ξ)* (Figure 5).

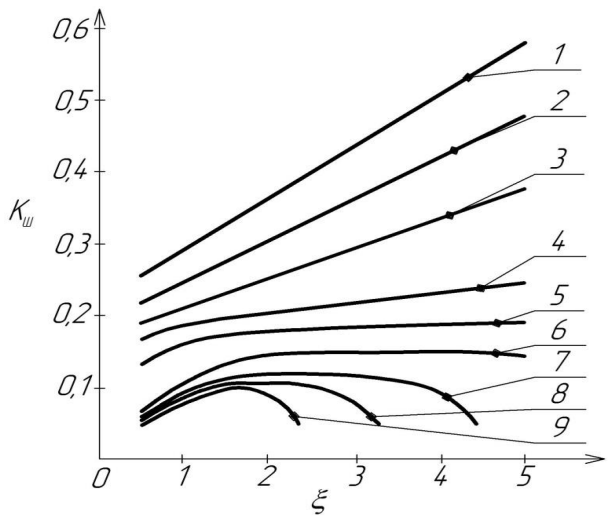

Figure 5 – Graph of the dependence of *Ks* on *(ξ)* for linear oscillations

Based on the analysis of experimental data, it can be seen that as the thickness of the flour layer *δ* increases, the transport speed *Ks* decreases. Analysis of the dependence $Ks = f(\xi)$ shows that the vibration transport speed *Vr* of any flour layer increases in the continuous vibration transport mode $\xi \leq 1$.

After analysing the process of transporting bulk materials under the action of linear vibrations, it was established that the efficiency of dosing can be increased by using elliptical vibrations of the dosing device's working body. This approach makes it possible to regulate the direction of movement of the bulk material and also expands the range of possible operating modes of the system [30-33].

Conclusions.

As a result of research conducted on the design and optimization of the operational characteristics of a vibrating volumetric feeder for finely dispersed materials (using wheat flour as an example), the following scientific and practical results were obtained: it was proven that under the action of vibration intensity, wheat flour enters a state of pseudo-fluidization, in which the effective viscosity coefficient decreases by 60–75%. This allows the influence of internal friction and cohesive forces to be neutralized, ensuring stable product flow without the formation of «arches» and stagnant zones in the dosing cone; the advantage of elliptical oscillations of the working body over rectilinear (directional) ones has been proven. It has been established that when using an elliptical trajectory with an axis ratio of 1:2 to 1:5 and a controlled phase shift angle ξ, the speed of vibratory transport of finely dispersed products increases by 8–10 times for layers with a thickness of $0{,}01 < \delta < 0{,}04$ m. This allows flexible adjustment of the dispenser's performance without changing the frequency of the vibration exciter; a mathematical model of the dispenser's elastic suspension has been developed, which allows calculating the frequency tuning parameters in the resonance zone ($z>\sqrt{2}$). This ensures the stability of the oscillation amplitude when the mass of the product in the hopper changes and minimizes dynamic loads on the packaging line frame, increasing the service life of bearing assemblies by 30–35%; through a full-factor experiment, it was established that to ensure a dosing error of no more than 1,5%, it is necessary to maintain the vibration intensity at a level of $a\omega^2 = 31{,}6 \ldots 71{,}0\ m/s^2$. The obtained regression equation confirms that the most significant factor affecting accuracy is the height of the material layer in the dosing bowl, which requires the implementation of automatic level control systems; the proposed modernization of the dispenser, which includes replacing disc washers with spring elements with progressive characteristics and introducing adaptive control of the oscillation phase, made it possible to: increase the equipment's technical readiness coefficient to 0,975; reduce specific energy consumption by 15–18% by operating in optimal energy modes; reduce the time required for maintenance and readjustment of suspension components by 2,5 times.

References:

1. ISO 12100:2010. Safety of Machinery – General Principles for Design – Risk Assessment and Risk Reduction.

2. ISO 9001:2015.Quality Management Systems – Requirements.

3. Chebanenko Y.V, Melnyk O.Yu , Cherniakov V.A. , Naumenko T.A., Sharan A.V., Kravchenko M.F., Ivashina L.L., Fedoriv V.M., Prokopenko E.V. Analysis of modern methods of legume processing and their impact on the nutritional value and digestibility of raw materials. Journal of Chemistry and Technologies, 2025, 33(3), 1092-1117.

4. Kravchenko M., Piddubnyi V., Romanovska O. Functional and technological properties of flour mixtures for dough. Nternational cientific-ractical ournal ommodities nd arkets. 47(3).–2023.–P. 125–134.

5. Piddubnyi, V., Stadnyik, I., Chahaida, A., Petrychenko, Y. Justification of mixer parameters for flour components. Technical Engineering.(1(89).–2022.–P.3-10.

6. Postnikova, M., Mikhailov, E., Kvitka, S., Kurashkin, S., Kovalov, O., Klymenko, O., Semenov, A., Kucher, V., Kowalczyk, Z. (2022). The Grain Cleaning Production Lines' Energysaving Operation Modes of Electromechanical Systems. Agricultural Engineering, 26(1) 51-63.

7. Stadnyk, I., Piddubnyi, V., Kolomiiets, O., Chahaida, A., Kravets, O., Fedoriv, V., Ieremeieva, O., Mihailik, V., Kravcheniuk, R., Radchenko, I. (2025). Determining the influence of drum mixer parameters on the change in dough components concentration at the initial mixing stage. Eastern-European Journal of Enterprise Technologies, 2 (11 (134)), 6–15.

8. Fedoriv V.M., Stechyshyn M.S., Martynyuk A.V., Liukhovets V.V., Honcharuk V., Matsiuk I. Проєктування впливу експлуатаційних параметрів на деформацію тіста при нагнітанні. Modern Engineering and Innovative Technologies. Issue №37, Part 1,– Karlsruhe.–2025.–P.36-46.

9. Fedoriv, V., Stechyshyn, M., Martynyuk, A., Liukhovets, V., Lysenko, I., Trofymchuk, M. Design and construction of operational performance of modern flour mixers. SWorld-Ger Conference Proceedings.The current stage of development of

scientific and technological progress '2025 . –No. gec37-00(2025). – C. 7–11.

10. Fedoriv V.M., Stechyshyn M.S., Martynyuk A.V., Kurskoi V.S., Pereima A.R. Обгрунтування конструктивних параметрів віброзмішувачів для борошняних компонентів. Modern Engineering and Innovative Technologies. – Issue №32, Part 1,– Karlsruhe.–2024.–P.11-19.

11. Fedoriv V.M., Liukhovets V.V., Lisevych D.V., Manita I.M. Substantiation of structural and mechanical characteristics of baking bakery products. SWorld-Ger Conference Proceedings. Technique and technology of the future '2024. –No. gec35-00(2024). – C. 9–13.

12. Fedoriv V.M., Stechyshyn M.S., Martynyuk A.V., Kurskoi V.S., Pereima A.R. Determination of the relative speed for screening bulk materials. SWorld-Ger Conference Proceedings. Scientific and technological revolution of the XXI century '2024. –No. gec32-00(2024). – C. 5–9.

13. Fedoriv VM., Bondar A Y., Efimovich MO . Study of design parameters of vibrating sifters. SWorld-Ger Conference Proceedings. The current stage of development of scientific and technological progress '2024. –No. gec31-00(2024). – C. 3–6.

14. Fedoriv V.M., Oleksandrenko V.P, Martynyuk A.V. Визначення конструктивних параметрів вібраційних просіювачів. Modern Engineering and Innovative Technologies. – Issue №31, Part 1, – Karlsruhe.–2024.–P.3-8.

15. Fedoriv V.M., Piddubnyi V.A., Stadnyik I.Ya., Diichuk V.V. Проєктування впливу експлуатаційних параметрів борошна зі спельти на якість макаронних виробів. Modern Engineering and Innovative Technologies.– Issue №40, Part 1, – Karlsruhe.–2025.–P.35-47.

16. Девін В., Єрмаков С., Горбовий О., Підлісний В., Семенов О. Дослідження робочих органів молоткових дробарок за методом скінцених елементів. ETR, №3. – 2024. – С.65-68.

17. Ковальов О.В., Бабко Є.М., Місечко М.О., Федорів В.М. Zeovac вакуумне охолодження – технологія майбутнього //Хлібопекарська та кондитерська справа. – 2010. –№2. – С.28-30.

18. Логвінський Р.В., Доломакін Ю.Ю., Ковальов О.В., Федорів В.М. Теоретичні розрахунки і практичні вимірювання параметрів теплообміну в конвективних хлібопекарських печах // Ukrainian Food Journal. – 2012. – № 1. – С. 86-90.

19. Малкіна, В., Кюрчев, С., Гуцол, Т., Верхоланцева, В., Кюрчева, Л., Мірошниченко, М., Білюк, М., Підлісний, В., Гюргюлю, Х., Ковальчик, З. Оптимізація параметрів віброконвеєрної системи для інфрачервоного сушіння сої. Agricultural Engineering, vol.26, no.1, 2022, pp.157-166.

20. Мельник, І. А., Романюк, Ю. В. Інноваційні рішення у пакуванні харчових продуктів. Вісник НУХТ, 2020, Т. 26, №2, с. 142–150.

21. Приліпко Т.М., Косташ В.Б., Федорів В.М., Семенов О.М., Підлісний В.В. Аналіз методів експертизи якості, ідентифікаціїї та виявлення фальсифікації харчової продукції і сировини: монографія – Кам'янець-Подільський: ЗВО «ПДУ», 2023. – 406 с.

22. Приліпко Т.М., Косташ В.Б., Семенов О.М., Підлісний В.В. Сучасні способи використання функціональних інгредієнтів для виробництва харчових продуктів тривалого терміну зберігання: монографія. Кам'янець – Подільський: ЗВО «ПДУ», 2023. 346 с.

23. Семенов О.М., Підлісний В.В., Федорів В. М., Горбатюк М. Дослідження фізико-хімічних методів підготовки споживчої тари, матеріалів і продукції до фасування // Наука XXI ст.: виклики та перспективи : колективна монографія в 2 томах / за заг. ред.: В.В. Іванишина. – Тернопіль : Крок, 2021. Т.2. Природничі науки.– с. 20-30.

24. Семенов О.М., Піддубний В.А., Соколенко А.І. Вибір геометрії упаковок // Упаковка. – 2006. – № 5. – С. 30-33.

25. Соколенко А.І., Хоменко М.Д., Піддубний В.А., Семенов О.М. Масообмін в процесах змішування рідинних і газових потоків // Цукор України – 2006 – № 6 – С. 19-21

26. Стадник І., Деркач А., Кравченюк Х., Федорів В. Вплив технологічного середовища на механічне зношування робочих органів машини. SWorldJournal.

–2024. –№ 1(23-01). –С. 31–38.

27. Федорів В.М., Олександренко В.П., Мартинюк А.В. Експлуатація та обслуговування обладнання: навч.посіб. Хмельницький: ХНУ, 2024. 335 с.

28. Федорів В. М., Підлісний В. В., Семенов О. М. Обґрунтування впливу фізіологічних процесів на якість зберігання зернової маси. Подільський вісник: сільське господарство, техніка, економіка. 2020. № 33. С. 47–53.

29. Федорів В.М., Підлісний В.В., Семенов О.М., Єрменчук О.О. Обґрунтування впливу інтенсифікації процесу просіювання на адгезійні властивості сипких матеріалів. Вісник Львівського торговельно-економічного університету. Технічні науки.– 2022.– № 29. – С. 70-76.

30. Федорів В.М., Ковальов О.В., Осауленко Ю.В., Бабко Є.М. Високоінтенсивні просіювачі борошна // Зерно і хліб. – 2004. – № 3. – С. 47.

31. Федорів В.М., Ковальов О.В., Лісовенко О.Т. Обладнання для просіювання сипких матеріалів. Харчова промисловість. Міжвідомчий тематичний науковий збірник УДУХТ. –2000. – № 45. – С. 234-236.

32. Федорів В.М. Викладання дисциплін з обладнання харчової промисловості студентам спеціальності 181 «Харчові технології». Матеріали XLIX Міжнародної науково-практичної інтернет-конференції // Збірник наукових праць. – Переяслав.– 2022. – С. 40–42.

33. Шевченко О., Ткачук Н., Стадник І., Деркач А. Реологічний підхід до валкового нагнітання середовища. Наукові праці НУХТ. К.: НУХТ, 2017. Т. 23. № 1. С. 104–112.

Анотація. *У статті проведено комплексне дослідження з проєктування та оптимізації експлуатаційних показників вібраційних об'ємних дозаторів, інтегрованих у високопродуктивні лінії пакування пшеничного борошна. На основі системного аналізу зовнішнього оточення та специфічних реологічних властивостей сировини обґрунтовано необхідність застосування вібраційних технологій для подолання ефектів сводоутворення та високої адгезії.*

Вперше запропоновано математичну модель динаміки взаємодії робочого органу з дрібнодисперсним аерованим середовищем, що базується на зміні коефіцієнта ефективної в'язкості під впливом параметра віброінтенсивності. Проаналізовано переваги використання еліптичних траєкторій коливань над прямолінійними, що дозволило підвищити стабільність вібротранспортування та знизити похибку дозування до 1,2–1,5%.

Методологія дослідження базується на використанні повнофакторного планування Бокса-

Бенкена та методів віброреології. Окрему увагу приділено проєктуванню пружних підвісок дозатора та розрахунку їх циклічної витривалості. Доведено ефективність впровадження вузла віброущільнення продукту в пакеті, що забезпечує зменшення об'єму порції на 20% та покращує герметизацію тари. Розраховано показники експлуатаційної надійності за законом Вейбулла, що підтвердило зростання коефіцієнта технічної готовності до 0,975. Сформульовані рекомендації мають практичне значення для підвищення продуктивності пакувальних комплексів та зниження браку виробництва.

Ключові слова: *проєктування, вібраційний дозатор, пакування борошна, еліптичні коливання, ефективна в'язкість, точність дозування, надійність обладнання, віброущільнення, експлуатаційні параметри.*

Article sent: 19.01.2026

© Pidlisnyj V.V., Semenov A.M. , Fedoriv V.M.

Scientific publication

International periodic scientific journal

ScientificWorldJournal

Issue №35
Part 1
January 2026

Indexed in
INDEXCOPERNICUS
high impact factor (ICV: 73)

Articles published in the author's edition

Academy of Economics named after D.A. Tsenov
Bulgaria jointly with SWorld

Signed: January 30, 2026

e-mail: editor@sworldjournal.com
site: www.sworldjournal.com

www.sworldjournal.com

ISSN 2663-5712